LET	ECN	REVISION	DRAWN	APPVD	DATE
A	18810	CHANGED I.D. TAG SEE ECN	BA	ORE	25 JUN 94

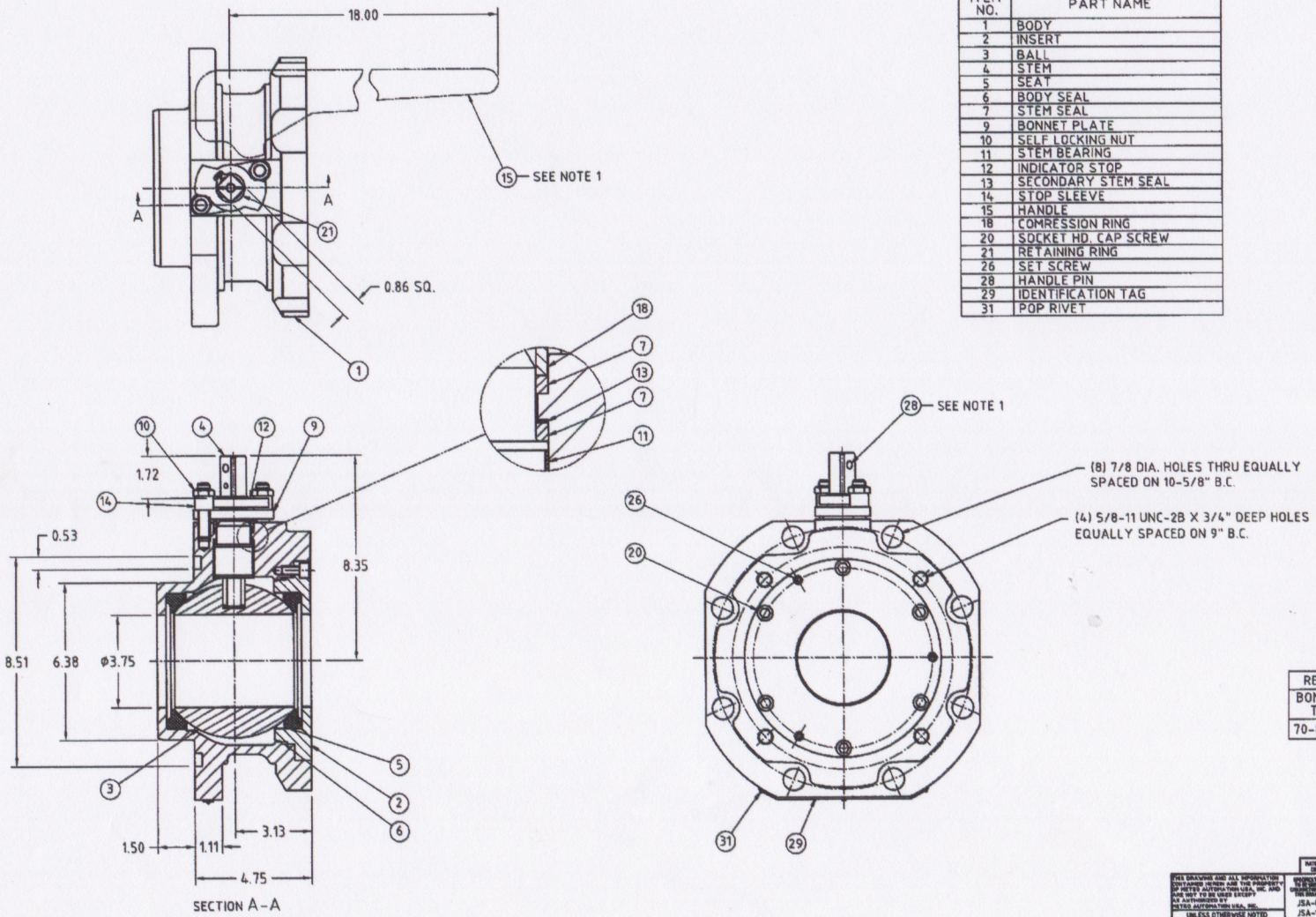

ITEM NO.	PART NAME
1	BODY
2	INSERT
3	BALL
4	STEM
5	SEAT
6	BODY SEAL
7	STEM SEAL
9	BONNET PLATE
10	SELF LOCKING NUT
11	STEM BEARING
12	INDICATOR STOP
13	SECONDARY STEM SEAL
14	STOP SLEEVE
15	HANDLE
18	COMRESSION RING
20	SOCKET HD. CAP SCREW
21	RETAINING RING
26	SET SCREW
28	HANDLE PIN
29	IDENTIFICATION TAG
31	POP RIVET

NOTE:
1. HANDLE (15) & PIN (28) WILL BE SUPPLIED ONLY ON REQUEST.
HANDLE NO. = 012-0535-22
PIN NO. = 010-0092-41

REQUIRED FASTENER TORQUE	
BONNET NUT TORQUE	INSERT FASTENER TORQUE
70-80 IN. LBS.	25-35 FT. LBS.

THIS DRAWING AND ALL INFORMATION CONTAINED HEREIN ARE THE PROPERTY OF METSO AUTOMATION USA, INC. AND ARE NOT TO BE USED EXCEPT AS AUTHORIZED BY METSO AUTOMATION USA, INC.

UNLESS OTHERWISE NOTED DIMENSIONING, TOLERANCING, & DRAWING INTERPRETATION IS IN ACCORDANCE WITH ASME Y14.5M

ANGLES = ±0° FINISH = 250

REMOVE SHARP EDGES AND CORNERS TO .02-.10 RADIUS OR CHAMFER, DIMENSIONS IN INCHES.

MATERIAL CODE	MATERIAL TYPE	MATERIAL SPECIFICATIONS	DIST. MODE

SIZE FROM PART NO. | DO NOT SCALE DRAWING | SCALE 1/2

TITLE: ASSEMBLY 4" AZFRL MOD. B RAILROAD VALVE

DRAWN P.J.D. DATE 11/25/92
APPVD B.J.W. DATE 12/2/92

METSO AUTOMATION USA, INC.
SHREWSBURY, MASSACHUSETTS

SIZE D | DWG NO 5440 | REV A

SHEET 1 OF 1